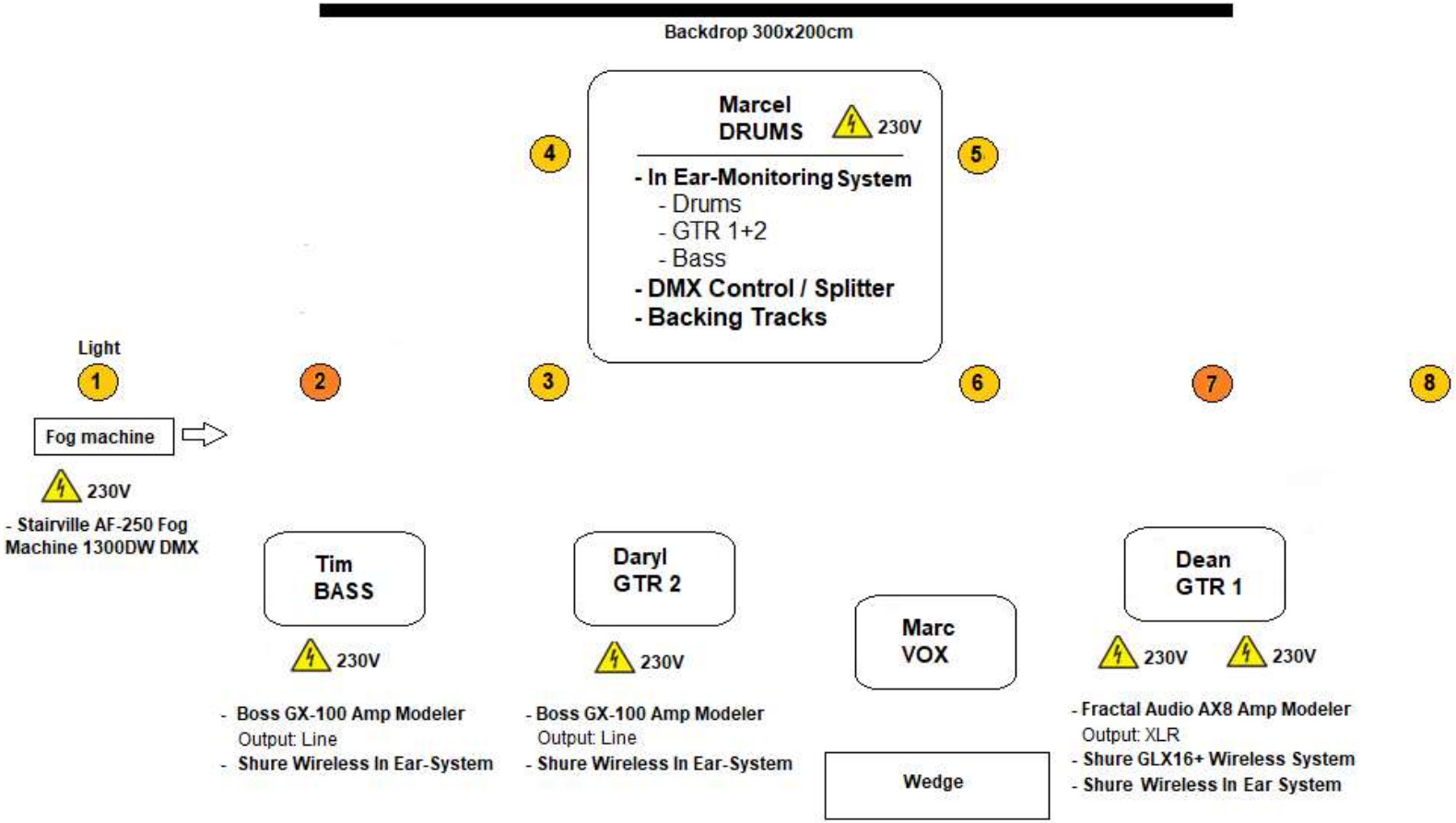BELIALED - Stage Plot